EURAMET

EMPIR PhotoLED

Future Photometry Based on Solid-State Lighting Products

PhOto LED

ILLUMINANCE MEASUREMENT OF WHITE LED SOURCES USING PQED

Petr Kliment, Kateřina Drbálková, Marek Šmíd

CZECH METROLOGY INSTITUTE

EMPIR EURAMET

The EMPIR initiative is co-funded by the European Union's Horizon 2020 research and innovation programme and the EMPIR Participating States

Illuminance measurement Background

➢ ***Traditional photometer***

- Uses filters in front of the detector element in order to have the normalized spectral responsivity similar to V(λ) function defined by CIE

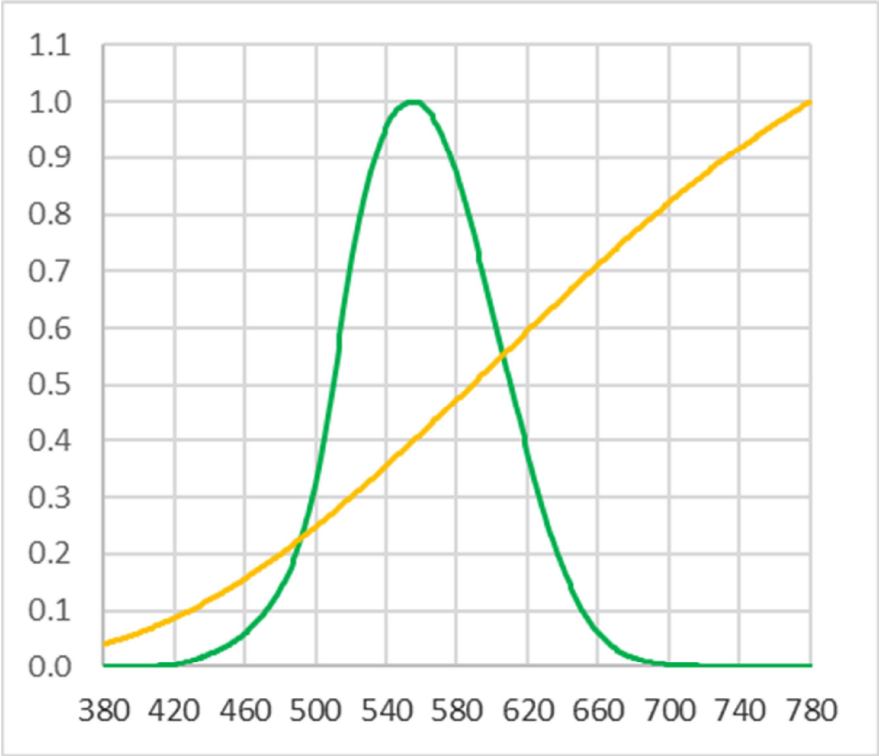

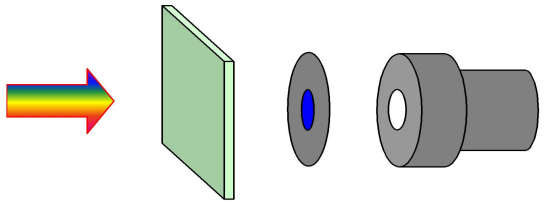

Illuminance measurement Background

➢ ***Unfiltered photometer***

If the spectrum of the source is limited to the visible wavelength range (**white LED**),

- an unfiltered detector can be used
- it‘s spectral responsivity has to be well known
- the spectrum of the source has to be measured accurately.

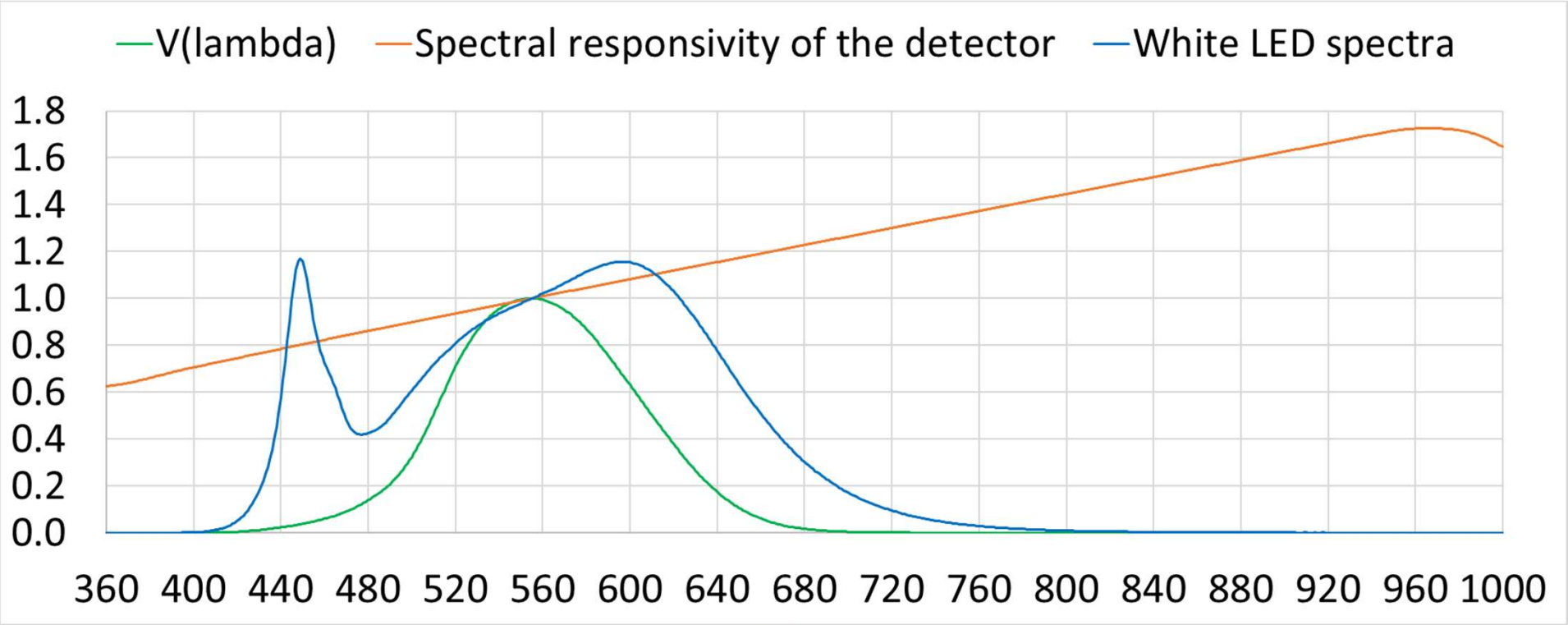

Illuminance measurement Background

➢ ***Unfiltered photometer***

- **Silicon trap detector**
- Consists of 3 single element silicon photodiodes
- The precision aperture in front of the detector
- the spectral responsivity has to be calibrated against a higher standard.

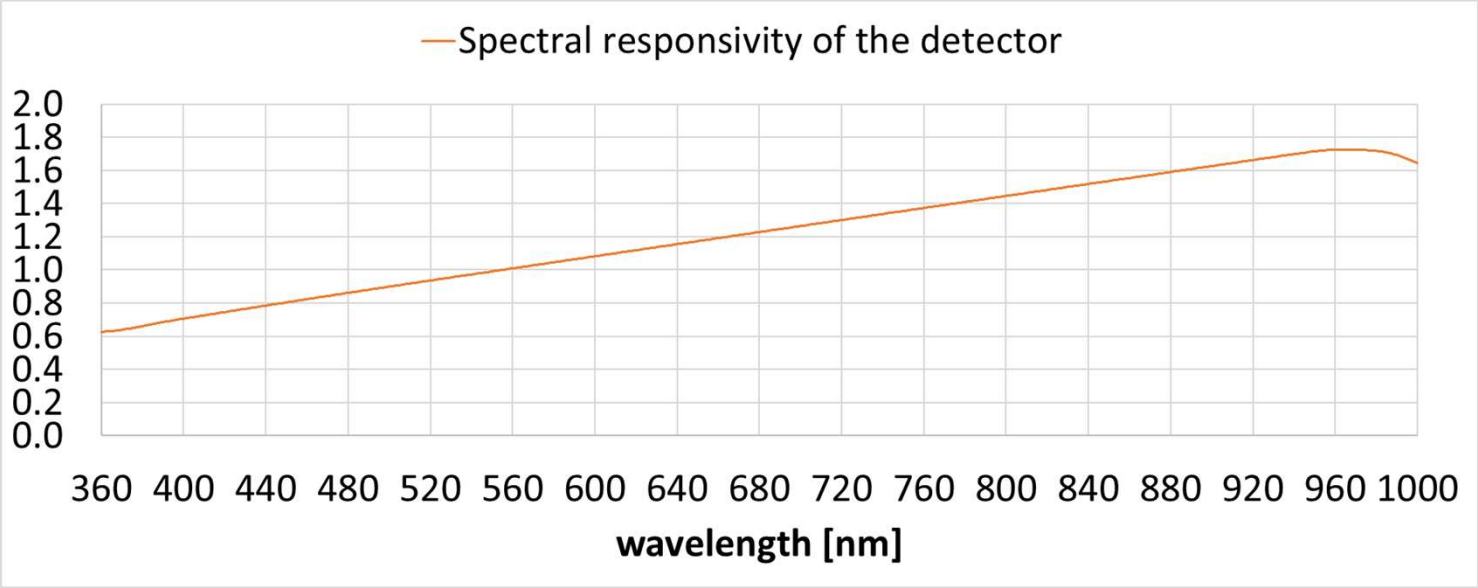

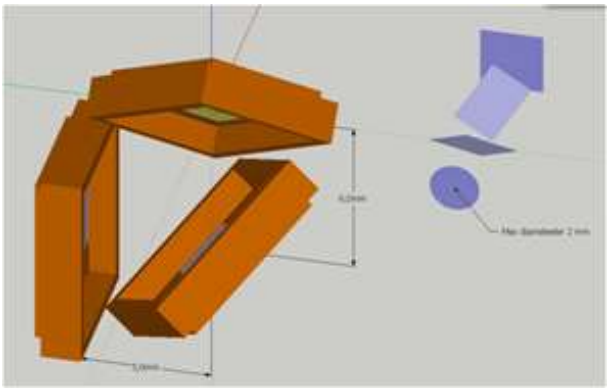

Illuminance measurement Background

➢ ***Unfiltered photometer***

- **Predictable quantum efficient detector (PQED)**
- is a primary realization standard for optical power with well known spectral responsivity
- The spectral responsivity of the PQED can be predicted with 0.01% standard uncertainty
- Suitable for the visible wavelength range
- Compared to the cryogenic radiometer it worked at room temperature and it is easy to operate
- Nitrogen flow system is used to prevent dust and moisture contamination

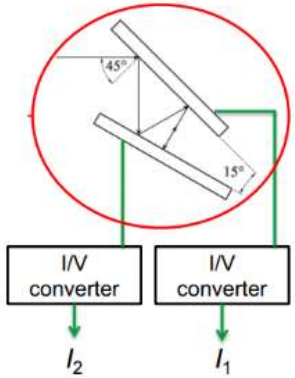

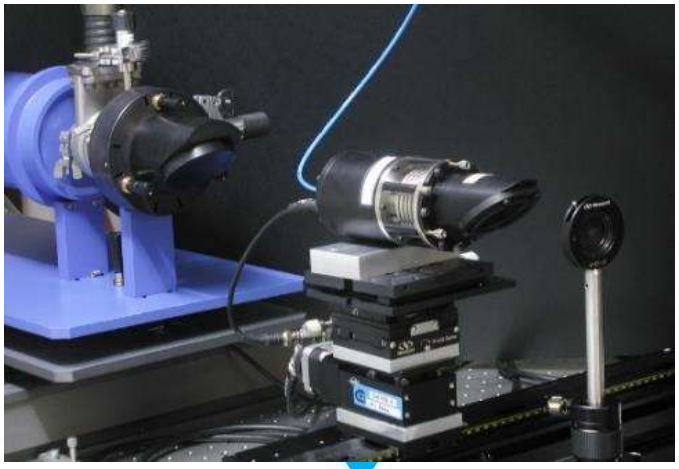

Classical traceability of photometric measurements in CMI

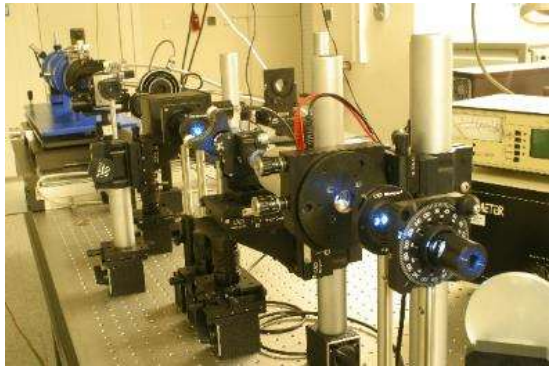

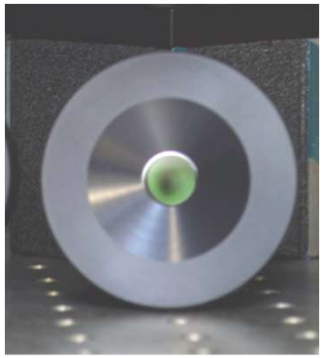

National standard of the total radiant flux of the visible radiation
(CMI cryogenic radiometer)

↓

Transfer standard of the total radiant flux of the visible radiation
(silicon 3 element traps)

↓

Primary photometer
(temperature-stabilized filtered detectors with spatially homogeneous filter)

↓ Calibration source **A CIE**

Luminous intensity standard lamps or **working photometer**
(Wi41 G Osram standard lamps, temperature-stabilized filtered detectors with mosaic filter)

↓ Calibration source **A CIE**

Customer luminous intensity standard lamp or **photometer**

A CIE

New traceability of photometric measurements of LED

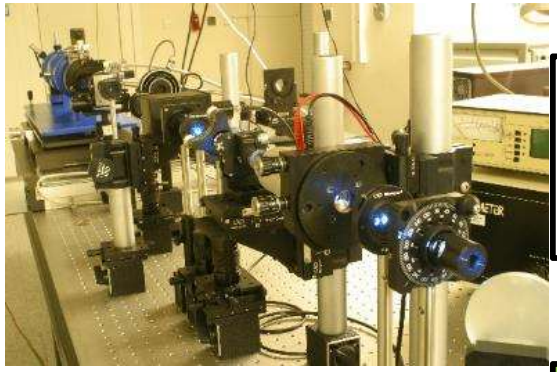

National standard of the total radiant flux of the visible radiation
(CMI cryogenic radiometer)

Primary unfiltered photometer
(silicon 3 element trap with precise aperture)

Calibration source **LED**

LED

LIS-A

Luminous intensity standard LED or **working photometer**
(LIS-A standard LED, temperature-stabilized filtered detectors with mosaic filter)

Calibration source **LED**

Customer luminous intensity standard LED or **photometer**

New traceability of photometric measurements of LED

The spectral responsivity of the PQED primary photometer is well known with small uncertainty

Primary unfiltered photometer
(**PQED** with precise aperture)

Calibration source LED

Luminous intensity standard LED or **working photometer**
(LIS-A standard LED, temperature-stabilized filtered detectors with mosaic filter)

Calibration source LED

Customer luminous intensity standard LED or **photometer**

LED

LIS-A

Usage of PQED and LIS-A allows us to reduce the metrological traceability chain to minimum
And the total uncertainty of illuminance measurement is reduced too.

Calibration of photometers with LED source

➢ ***Replacement of convenient Source A with standard source LED***

A classical photometer is usually calibrated against calibration standard source A CIE but it is used to measure different source with different spectra

- Which can cause big errors
- Deviations from the ideal spectral responsivity can be corrected by calculating spectral mismatch correction factor but it is not easy because we need to measure the spectral responsivity of the photometer and the spectral characteristic of the measured source

Implementation of **PQED** and **LED standard source (Luminous intensity standard LIS-A)** to the calibration process of photometers (luxmeters) brings this benefits:

- It is possible to reach lower uncertainty of the primary calibration
- A classical photometer calibrated against LED calibration standard source
  can measure any type of light with a single calibration just like before,
  but with lower errors on average.

Calibration

measurement

Implementation of unfiltered photometers

Tasks of this project done to implement unfiltered photometer in measurement of LED sources:

- *Precision aperture (development, and characterization)*
- *Development of trap detector photometer*
- *Adapting the PQED for photometric measurement*
- *Deriving the spectral responsivity of the photometer*
- *Measurement of the relative spectral distribution of the LED calibration source (LIS-A)*
- *Calculating the luminous responsivity of the PQED and trap Photometer for the LIS-A source*
- *Validation of PQED unfiltered photometer measurement*

Implementation of unfiltered photometers

- ***precision aperture (developed, produced and characterised)***

PhotoLED Trap

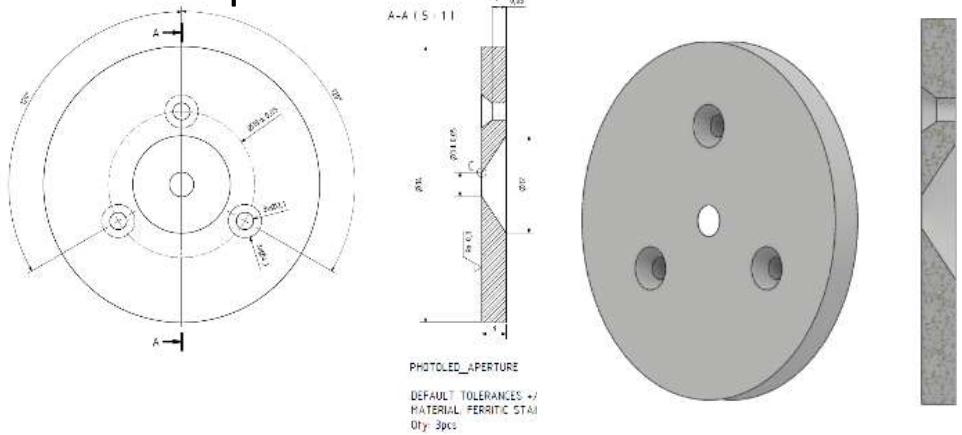

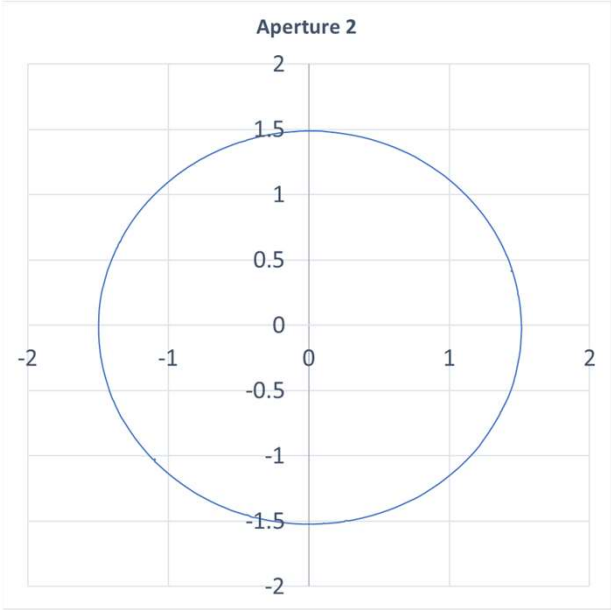

PQED

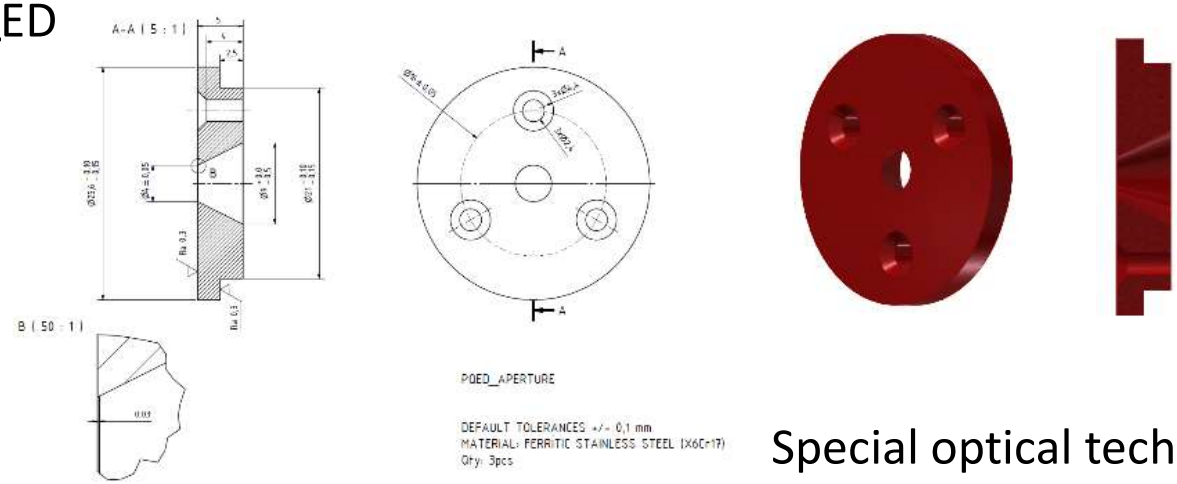

Aperture nr.	Aperture diameter	Ovality	Uncertainty	Unit
1.	2,9782	0,0152	0,0005	[mm]
2.	3,0011	0,0103	0,0005	[mm]
3.	3,0074	0,0149	0,0005	[mm]
4.	2,9963	0,0138	0,0005	[mm]
5.	4,0202	0,0109	0,0005	[mm]
6.	3,9984	0,0128	0,0005	[mm]
7.	3,9977	0,0236	0,0005	[mm]
8.	4,0026	0,0114	0,0005	[mm]

Special optical technique of measurement of aperture area with very low uncertainty used in this project

Implementation of unfiltered photometers

➢ ***Development of trap detector photometer – <u>PhotoLED trap</u>***

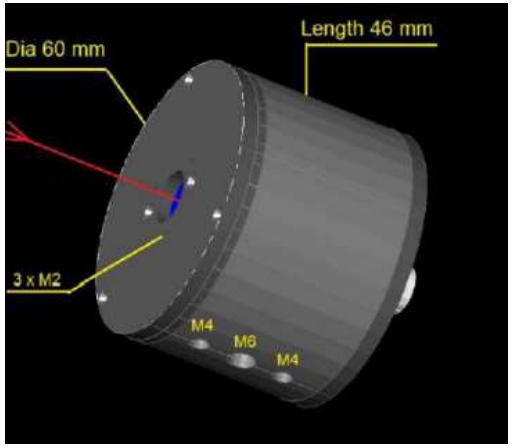

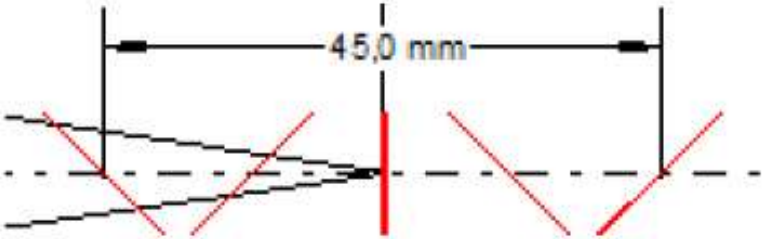

3 single element silicon photodiodes

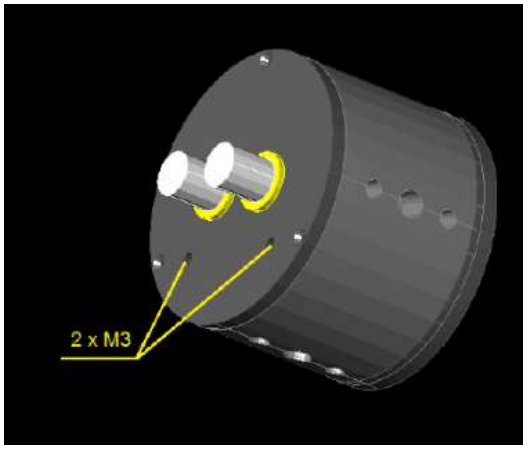

N_2 flow valve

Precision aperture

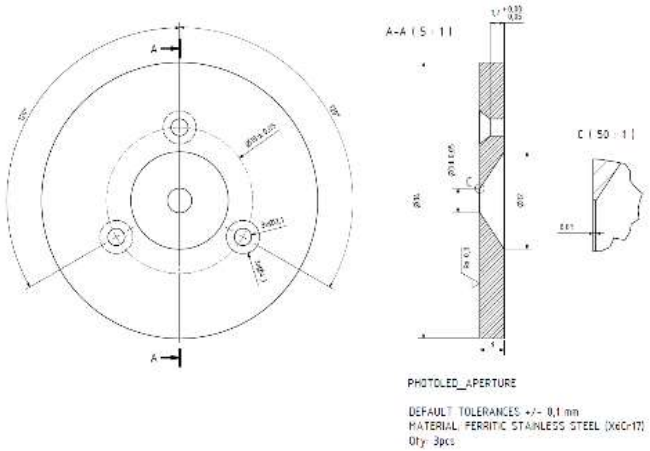

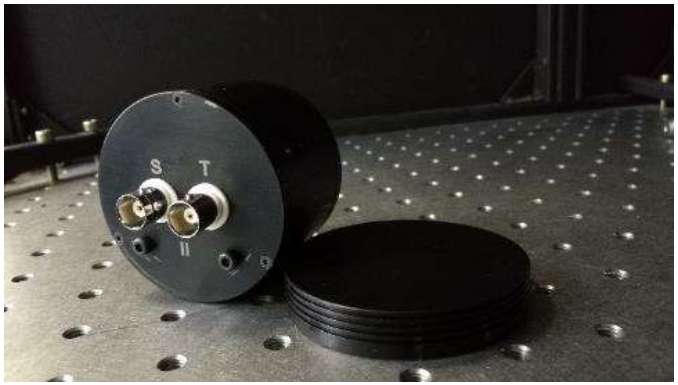

Implementation of unfiltered photometers

➢ ***Adapting the PQED for photometric measurement***

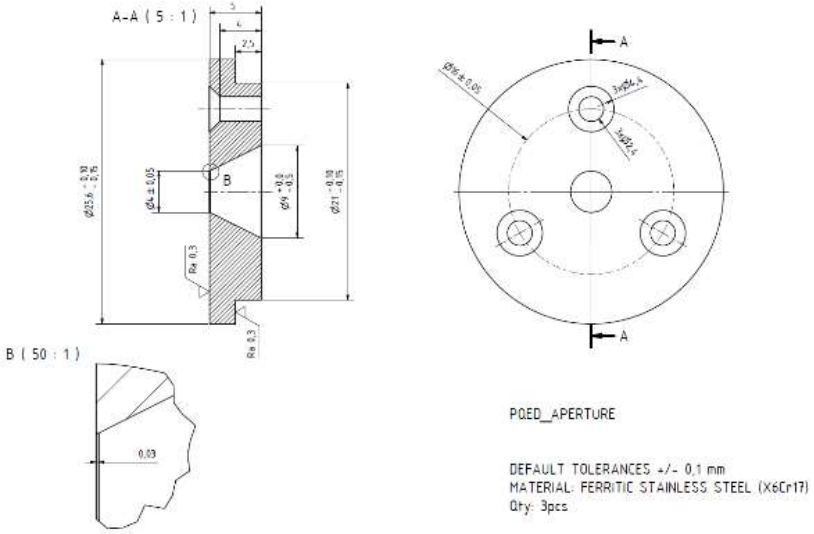

N_2 flow system

Implementation of unfiltered photometers

➢ ***Deriving the spectral responsivity of the photometer***

PhotoLED trap Spectral irradiance responsivity calibration

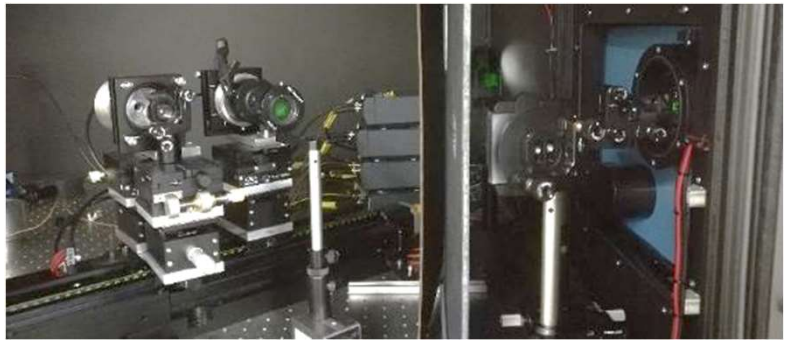

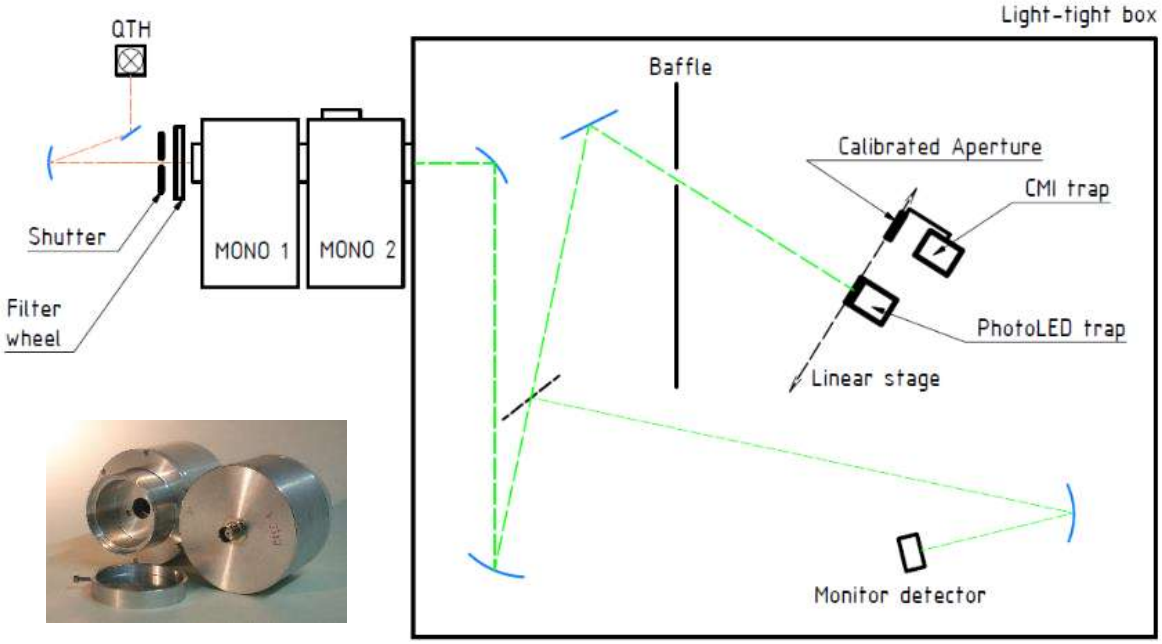

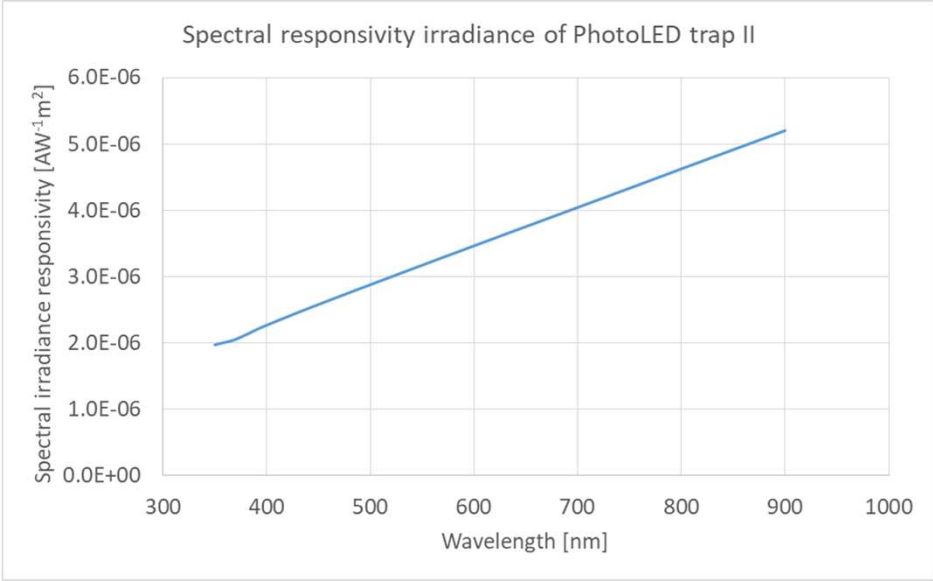

The spectral responsivity of the PhotoLED trap is traceable to the CMI cryogenic radiometer and was measured on Monochromator based facility. Compared with CMI transfer Si trap.

Implementation of unfiltered photometers

➢ ***Deriving the spectral responsivity of the photometer***

PQED spectral responsivity Model

The spectral responsivity of the PQED was modelled and validated by comparison with CMI cryogenic radiometer.

Predictable Quantum Efficiency Detector

Spectral responsivity of a photoelectric detector

$$R(\lambda) = \frac{e\ \lambda}{h\ c} * (1 - \rho(\lambda)) * (1 - \delta(\lambda))$$

$e\ \lambda / h\ c$ Responsivity of an **ideal quantum detector** Expressed by fundamental constants

λ vacuum wavelength

Non idealities

$\rho(\lambda)$ reflectance

$\delta(\lambda)$ loss of charge

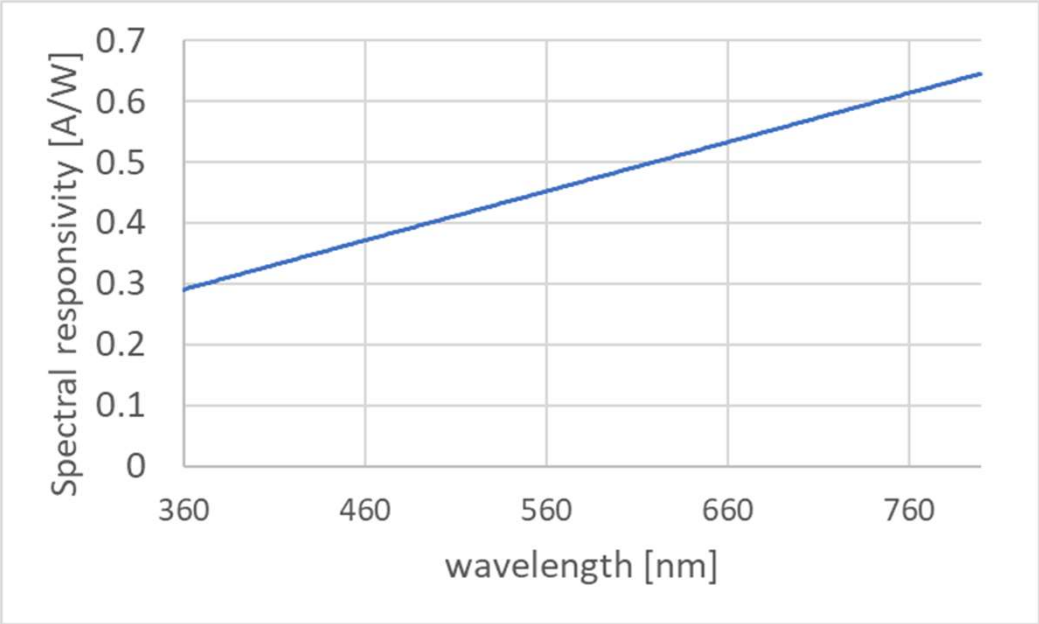

Implementation of unfiltered photometers

➢ ***Measurement of the relative spectral distribution of LED source***

LED LIS-A Source
was measured with CMI spectral irradiance calibration facility based on scanning double monochromator.
The spectral bandwidth was chosen 0.8 nm.

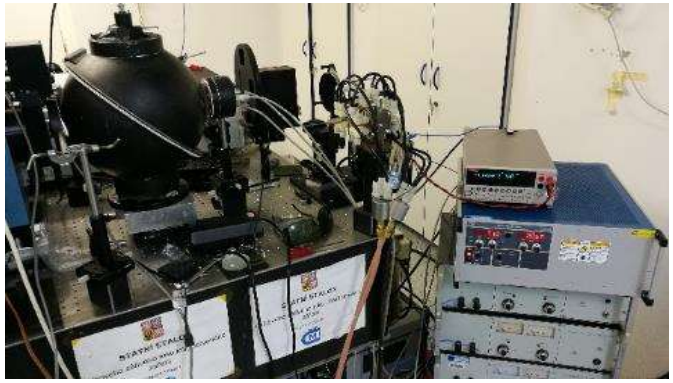

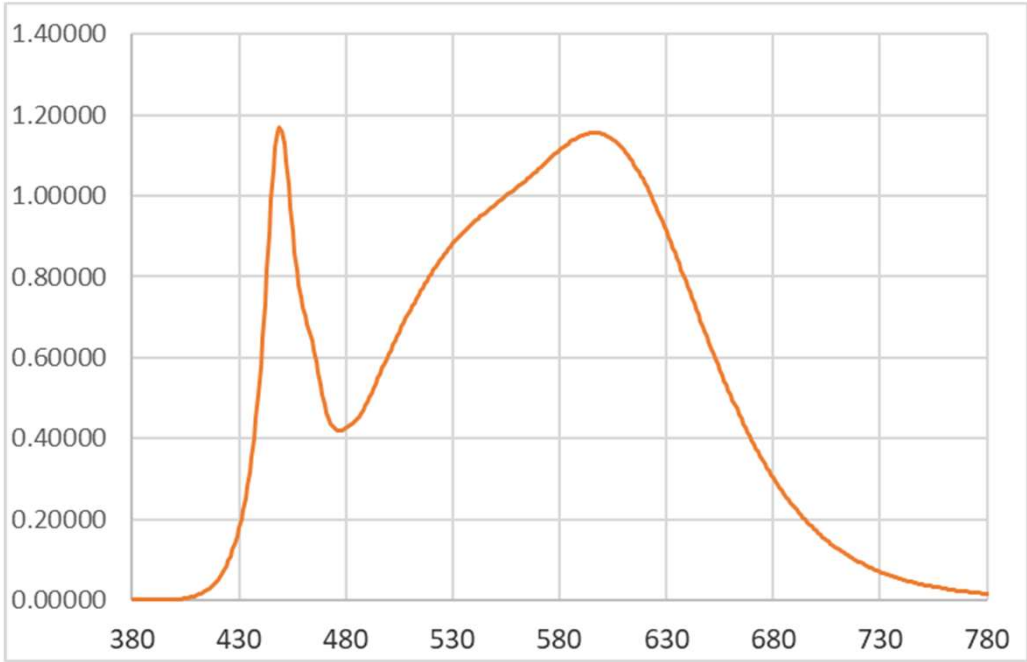

Implementation of unfiltered photometers

➢ ***Calculating the absolute luminous responsivity***

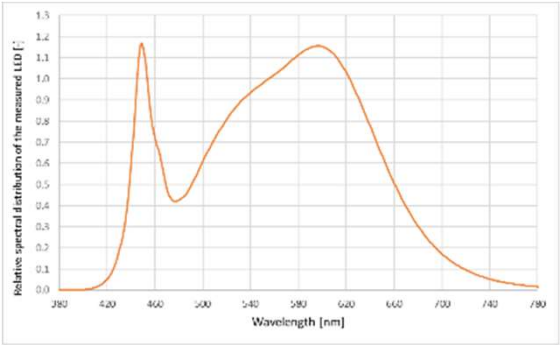

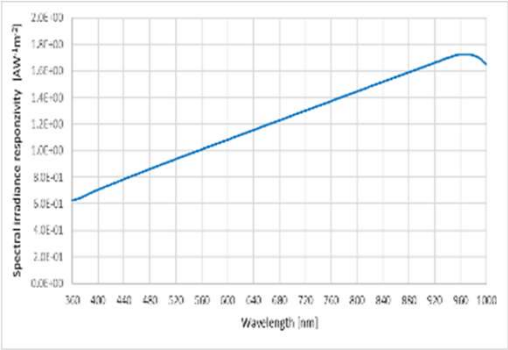

$$s_v = \frac{\int_{\lambda_{min}}^{\lambda_{max}} S_{LED}(\lambda) \cdot s(\lambda)\, d\lambda}{K_{cd} \int_{360\,nm}^{830\,nm} S_{LED}(\lambda) \cdot V(\lambda)\, d\lambda}$$

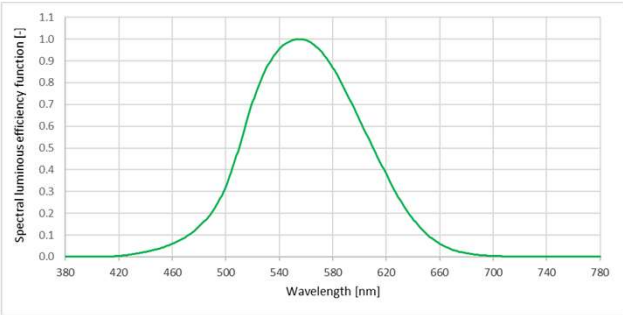

s_v	***illuminance responsivity A/lx***
$S_{LED}(\lambda)$	relative spectral distribution of the measured LED
$s(\lambda)$	**spectral irradiance responsivity [A.W^{-1}m^2]**
K_{cd}	**= 683 lm.W-1**
$V(\lambda)$	**spectral luminous efficiency function *V(λ).***

PQED

$$s(\lambda) = \frac{s_r(\lambda)}{A}$$

$s_r(\lambda)$	***spectral radiance responsivity [AW^{-1}]***
A	*Area A of the aperture in front of the PQED.*

Illuminance measurement of white LED sources using PQED

➢ ***The illuminance measurement of white LED sources using PQED***

- similar to the measurement with standard photometer on photometric bench

- laser system to adjust the PQED perpendicular to the beam
- nitrogen flow system is used to prevent dust and moisture contamination

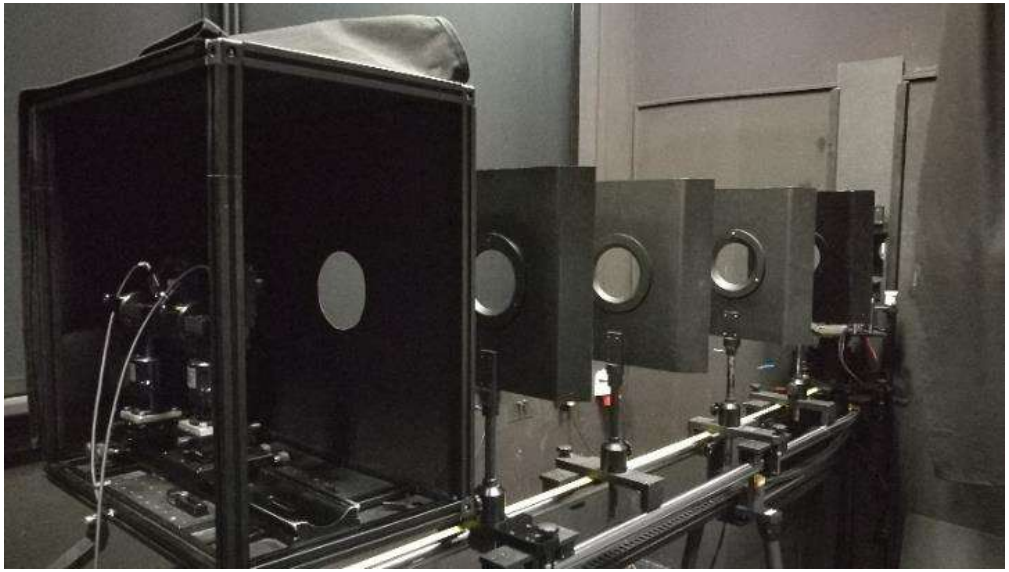

Measurement of PQED photocurrent i

- Illuminance calculation according to the formula:

$$E_v = \frac{i}{s_v}$$

s_v illuminance responsivity A/lx

i Photocurrent of PQED

Precise measurement of relative spectral distribution of the measured LED needed!

Implementation of unfiltered photometers

➢ ***Measurement of the relative spectral distribution of the LED source***

The sensitivity of the Luminous responsivity Uncertainty for the measurement precision of the relative spectral distribution of LED source

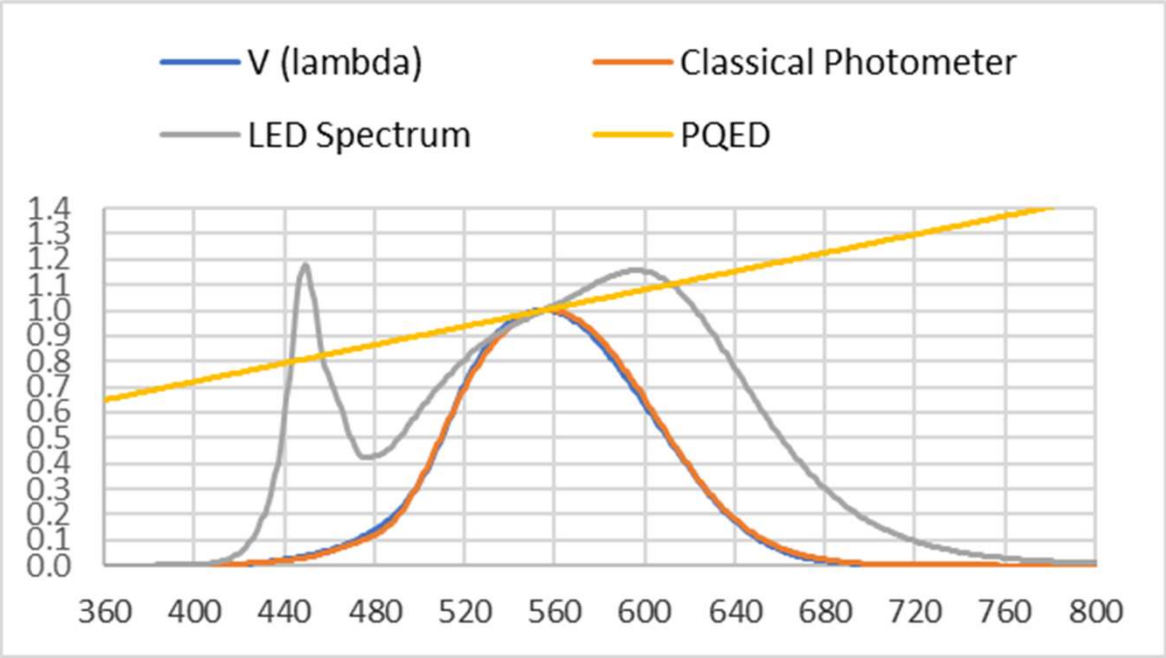

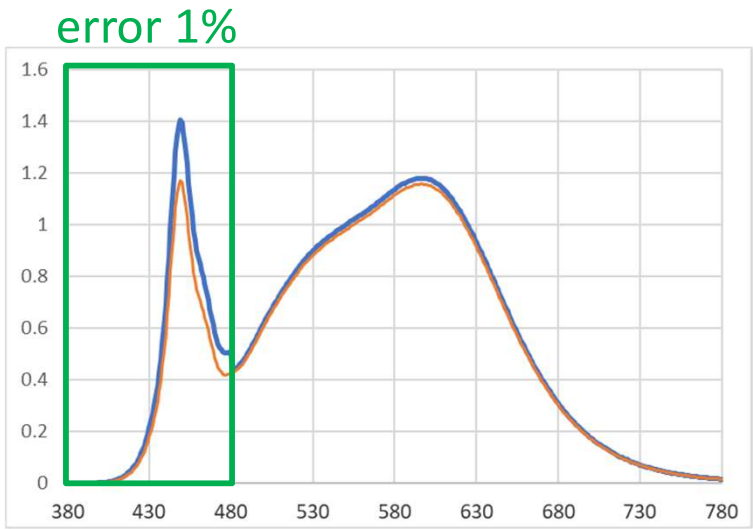

Detector	Error of the irradiance scale (400-480 nm) [%]	Illuminance responsivity error [%]
PQED	1.0	0.1
V(l) Photometer	1.0	0.01

Illuminance measurement of white LED sources using PQED

➢ *Validation of the PQED measurement*

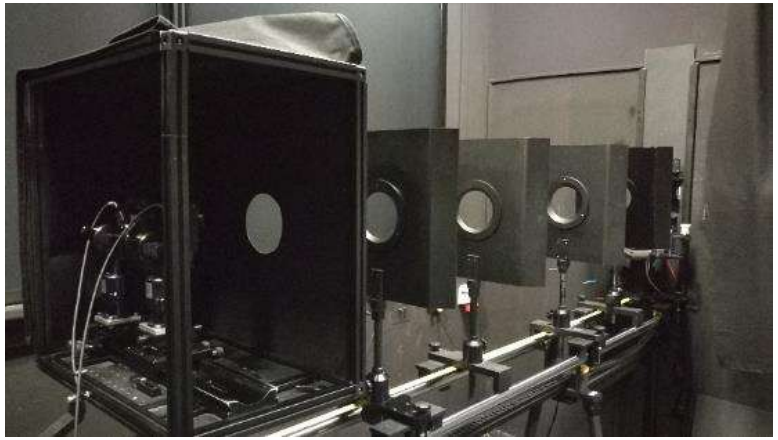

a validation of the illuminance measurement of white LED sources using PQED was done as a part of illuminance and luminous intensity comparison organized in this project.

The comparison artefact was LED standard illuminance source LIS-A

PQED results were compared with

- PhotoLED trap unfiltered photometer
- CMI primary filtered photometer

Relative deviation from CMI Primary V(λ) photometer [%]	
PQED	0.0031
PhotoLED trap	-0.0019

➢ *Uncertainty budget for the illuminance measurements*

	Rel. uncertainty [%]		
Description	**PQED**	**PhotoLED-Trap**	**Reference Photometer**
Source spectral irradiance relative	0.14	0.14	0.07
Relative responsivity measurement	0.01	0.05	0.03
Repeatability	0.03	0.02	0.03
Aperture area	0.04	0.04	0.04
Straylight	0.02	0.02	0.02
Absolute responsivity at 555 nm	0.01	0.13	0.16
Photocurrent measurement	0.01	0.01	0.02
Drift of the source	0.01	0.01	0.01
LED current setting	0.03	0.03	0.03
Distance measurement	0.02	0.02	0.02
Combined uncertainty	**0.16**	**0.21**	**0.19**
Expanded uncertainty ($k = 2$)	**0.31**	**0.41**	**0.38**

Illuminance measurement of white LED sources using PQED

- ***Practical measurement will be demonstrated in laboratory – you are invited !***

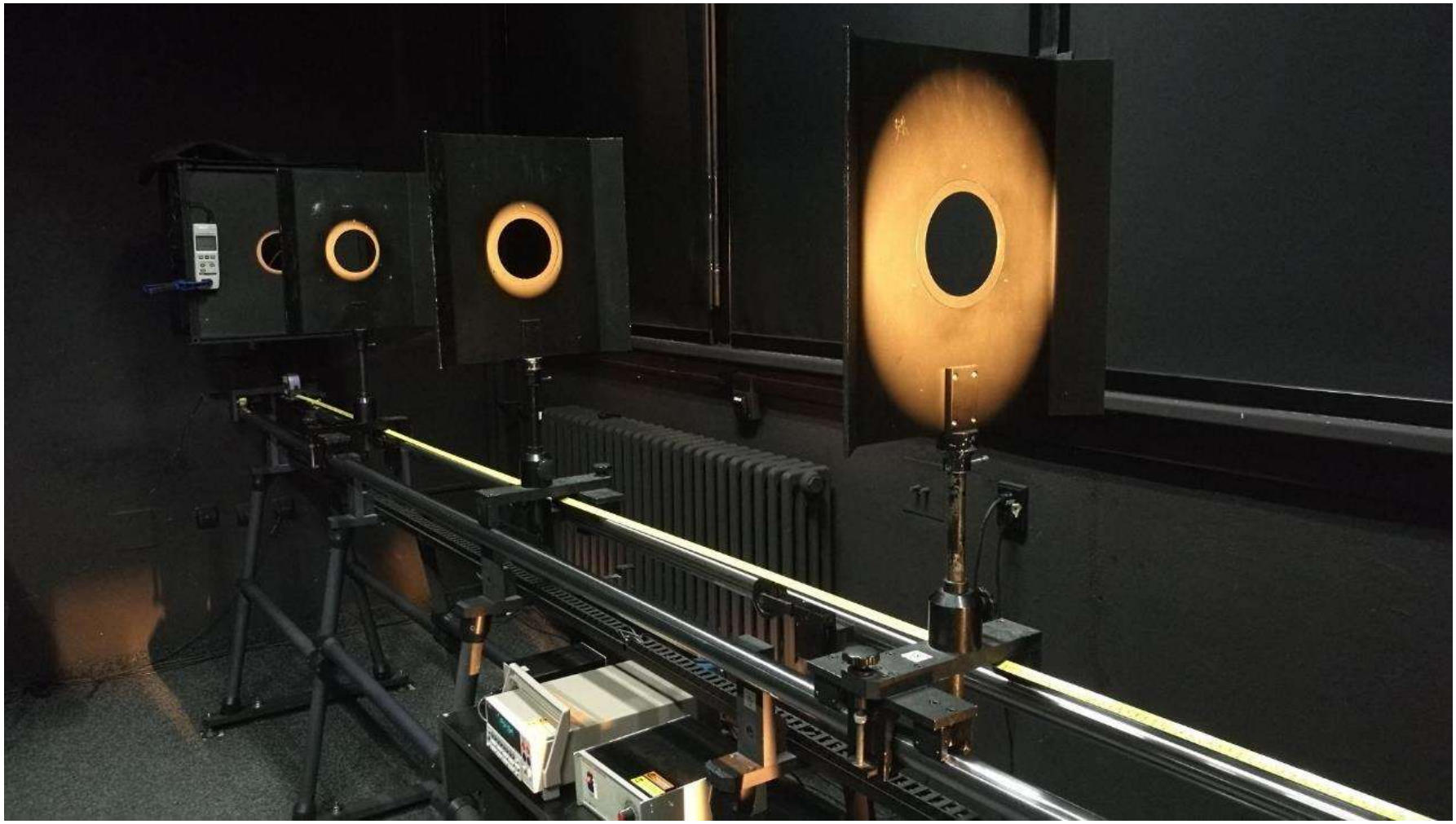

THANKS FOR YOUR ATTENTION

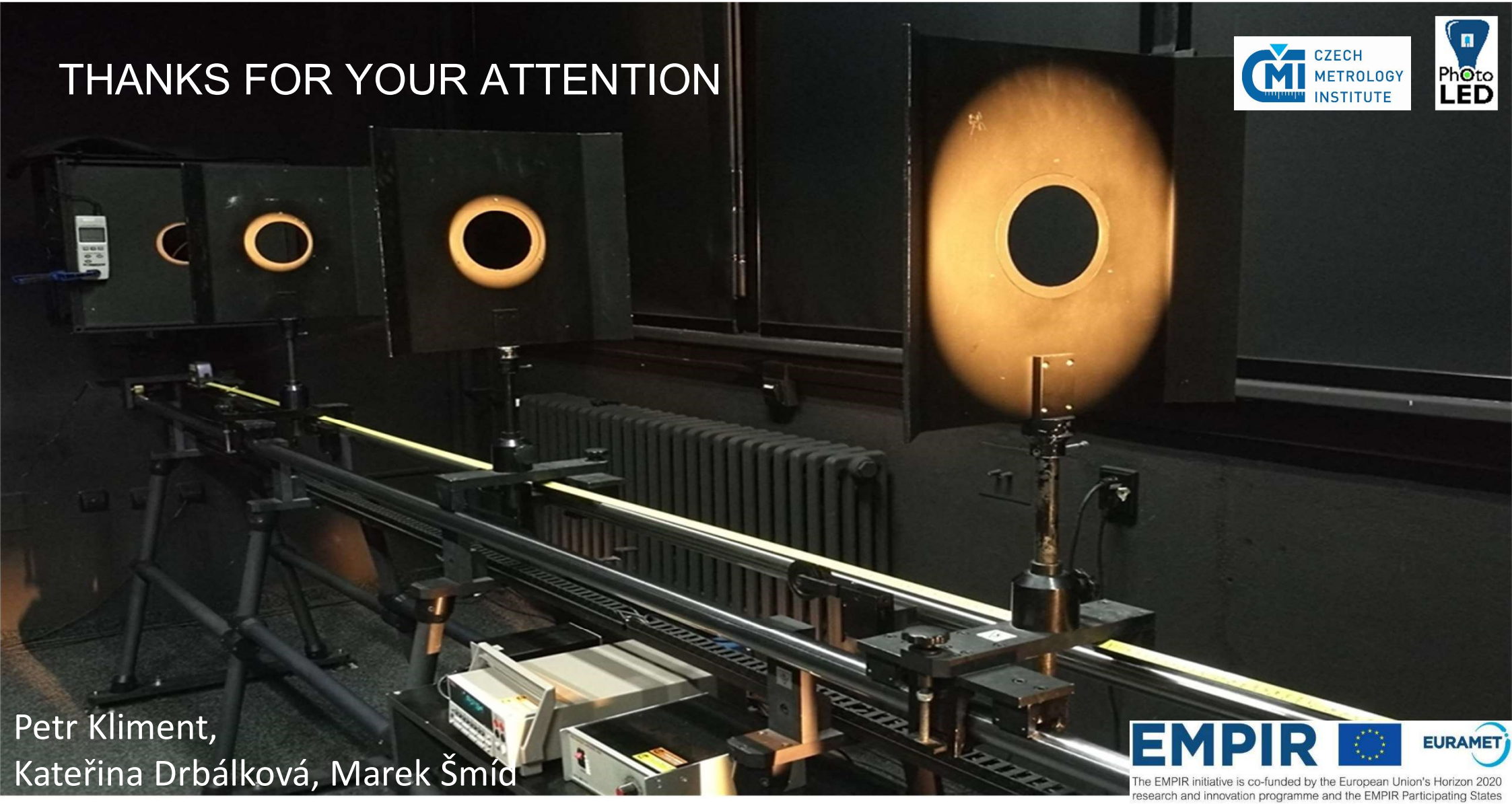

Petr Kliment,
Kateřina Drbálková, Marek Šmíd
pkliment@cmi.cz , kdrbalkova@cmi.cz
msmid@cmi.cz
+420 724 371 261

Okružní 31, 638 00 Brno, Czech Republic,
+ 420 545 555 337, www.cmi.cz

The EMPIR initiative is co-funded by the European Union's Horizon 2020 research and innovation programme and the EMPIR Participating States

The work leading to this study is partly funded by the European Metrology Programme for Innovation and Research (EMPIR) Project 15SIB07 PhotoLED “Future Photometry Based on Solid State Lighting Products”. The EMPIR initiative is co-funded by the European Union’s Horizon 2020 research and innovation programme and the EMPIR Participating States